The B-Class Sports Tourer

Mercedes-Benz

The B-Class. For the best of what's coming up.

Hit the road. With a Sports Tourer whose agility and comfort make every outing a little journey of adventure. Discover uncharted territories with sustainable, innovative drive systems and, optionally, with the dynamic all-wheel-drive system 4MATIC. And the optional LED High Performance headlamps show up everything in the very best light. There's so much to be discovered. Are you ready? Your B-Class is waiting.

FOR THE BEST IN EVERY FORMAT.

Experience your B-Class in fascinating HD. With the Mercedes-Benz brochure app for the iPad® and with the Digital Owner's Manual from "Mercedes-Benz Guides" for the iPhone®. Both apps feature a host of films and additional content and are available free of charge from the iTunes Store®.

For the best in every guise:

2 | Mercedes-Benz B 250 4MATIC
polar silver metallic
AMG Line, AMG 5-twin-spoke light-alloy wheels, Exclusive Package, Night Package, cranberry red leather upholstery, high-gloss black ash wood trim

14 | Mercedes-Benz B 220 d
jupiter red
Urban equipment line, 5-twin-spoke light-alloy wheels, Night Package, black leather upholstery

20 | Mercedes-Benz B 220 d
jupiter red
AMG Line equipment line, AMG 5-twin-spoke light-alloy wheels, AMG Exclusive Package, Night Package, black RED CUT leather upholstery, carbon-fibre-look trim

For the best in every detail:

24 | Mercedes me
28 | Mercedes-Benz Service
32 | BlueEFFICIENCY
34 | Natural Gas Drive
36 | Engines
37 | 4MATIC all-wheel drive
38 | Parking Pilot
39 | Integral safety concept
40 | COMAND Online multimedia system
42 | Ambient lighting
43 | EASY-VARIO-PLUS system
44 | Equipment and packages
54 | Optional extras
55 | Genuine accessories
56 | Wheels
58 | Technical data
61 | Upholstery and paintwork

The illustrations may show accessories and optional extras which are not part of the standard specification.

S B 2461

A dynamically designed front apron, delicately styled headlamps – and a unique light show which pays as much attention as it draws: in conjunction with the optionally available LED High Performance headlamps the driver is greeted by a blue light when unlocking the doors. Get in and feel good. In a spacious interior that's ideally prepared for all activities.

Attractive and accomplished. With the very best pedigree.

S B 2461

For whatever you encounter along the way.

Whether you are on your way to the mountains alone or to the seaside with the whole family. The reassuring feeling of driving a Mercedes-Benz accompanies you everywhere. Innovative driving assistance and safety systems support the driver and protect the occupants and other road users. Active Brake Assist, for example, which can provide the driver with a visual and audible warning of an impending rear-end collision and if necessary even initiate braking intervention automatically. That's the B-Class with Mercedes-Benz Intelligent Drive.

S B 2461
D

LED HIGH PERFORMANCE HEADLAMPS

What is required of light technology in a Mercedes? In particular during journeys at night it must not place excessive strain on the driver's eyes, and it should also be efficient and durable. The optional LED High Performance headlamps get straight to the point. The LED projection technology in the low beam and the LED reflection technology in the high beam provide for optimum illumination of the road. With a pleasant colour temperature which corresponds to that of daylight. And with the splendour befitting a Mercedes.

The best motive for
an active “drivestyle”.

S B 2461

Lighting to brighten any mood.

Light contributes considerably to our well-being. All the more reason to pay it special attention in a Mercedes. In the B-Class the optional ambient lighting creates a unique feel-good atmosphere. Particularly at night, its pleasantly indirect light accentuates the lines and the high-quality materials. The ambient lighting is based entirely on LED technology and offers twelve different colours and five dimmer settings.

A fiery statement tempered by a due portion of restraint.

A stylishly coordinated combination of high-quality appointments and materials characterises the optionally available Exclusive Package. The 3-spoke multifunction steering wheel is finished in fine leather. The luxury seats upholstered in leather, for example in cranberry red, add a fashionable flourish and fine highlights with contrasting topstitching.

ACTIVE BRAKE ASSIST

A little too close, and you're on collision course before you know it. Rear-end collisions are among the most common types of accident in road traffic. This has prompted Mercedes-Benz to develop Active Brake Assist, a radar-based safety system which can minimise the risk of a rear-end collision or lessen the severity of an accident. And this is how it works: on detecting that the distance to the vehicle in front is inadequate in the speed range between 30 and 250 km/h, the system alerts the driver visually via a warning lamp in the instrument cluster. If the distance continues to lessen, an audible warning is also sounded. In addition, Adaptive Brake Assist can support the driver's braking in order to prevent a collision. And should the driver not react at all, the system can intervene and reduce the speed by means of autonomous braking.

Keep your distance.
Stay ahead.

Because the best is coming up.

B for best value: systematically optimised aerodynamics resulting in a C_d value of only 0.25* reduce fuel consumption substantially. Another shining example of environmental compatibility is the B 200 c, which is streets ahead of the competition in its class with the extremely efficient Monovalent Plus natural gas drive.

* B 180 d BlueEFFICIENCY Edition with wheel R00.

B 2463

The best perspective.

S B 2463

Captured on camera: the sporty AMG Line with the Night Package. Powerful: the AMG bodystyling with the front and rear apron, side sill panels and high-sheen AMG light-alloy wheels. The Night Package makes a striking impression with selected design elements in high-gloss black, such as the radiator trim with two black louvres and chrome inserts plus the chrome-trimmed bumpers. Heat-insulating dark-tinted glass starting from the B-pillar further underlines the vehicle's sporty character.

Breathtaking prospects.

With the optional AMG Exclusive Package adding a special touch of exclusivity and individuality the entire interior is literally on red alert. On the upholstery in black RED CUT leather, the dashboard and the door centre panels in ARTICO man-made leather and the multifunction sports steering wheel in leather with a flattened bottom section – red contrasting topstitching adds striking sporty highlights throughout.

Navigation wird aktiviert.
Bitte warten...

Mercedes me

Our world in your hands.

www.mercedes.me – it's all about you. Discover a world of fascinating services, products and innovations which will enrich your life and take the strain out of everyday mobility. Coming straight to you in digital form. And turning our world into your world.

Life can be so fascinating when you're fully connected.

All our connectivity and mobility services plus a host of other fascinating features – all in one place and exclusively for you. That's Mercedes me. Register free of charge today and make the world of Mercedes-Benz your very own at your convenience – on your PC or laptop or in mobile mode via tablet, smartphone or smartwatch. And because your life is forever changing, our services are also continually evolving. Join us now at **www.mercedes.me/welcome**

Looking for individual inspiration in real life, too? The Mercedes me Stores are a fascinating phenomenon worldwide – in Beijing, Moscow and Hamburg, for example.

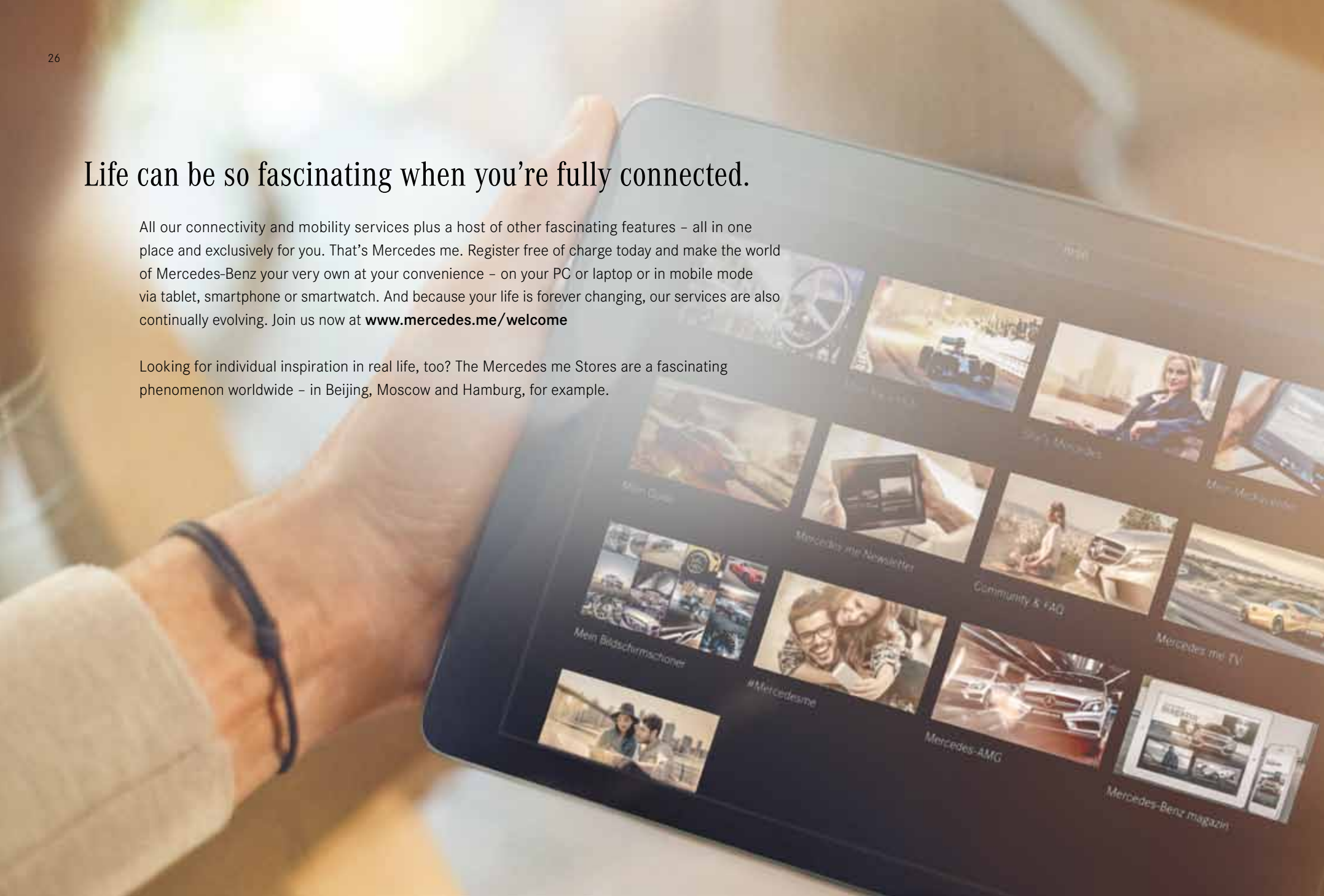

Mercedes me connect networks you with your vehicle – and your vehicle with the whole world. A comprehensive range of convenient connectivity services relating to all areas of your vehicle supports you, ensuring greater safety, closer contact and an even more fascinating driving experience. It's reassuring to stay connected all the time while you're on the move. Mercedes me connect includes Standard Services, which are able to provide you with automatic support in the event of a breakdown or an accident, and Remote Online Services – the option enabling vehicle settings to be carried out by smartphone – and lots more besides.

Mercedes me inspire offers special brand experiences and an opportunity to engage in an inspiring dialogue. We aim to share our ideas with you and we would like to know your ideas and wishes. So that we can always offer you the best solutions. A community is available to this end, and you will also find a growing range of offerings and experiences which go beyond the traditional vehicle-related topics – from areas such as events, travel and lifestyle.

Mercedes me move offers access to intelligent mobility solutions: car2go is the pioneer and global market leader in free-floating car sharing, the moovel mobility app pools the offerings from various mobility providers to find the ideal route from A to B. With the mytaxi app you can order a taxi, track its approach live and pay for your journey in a convenient manner. Mercedes-Benz Rent offers vehicles to suit all occasions for short- or long-term rental from an authorised Mercedes-Benz dealer near you. Blacklane enables you to book a chauffeur-driven limousine, FlixBus offers inexpensive, comfortable and environment-friendly trips on long-distance coaches.

Mercedes me assist makes easy work of organising maintenance for your vehicle, providing a convenient online means of locating a Mercedes-Benz dealer in your neighbourhood and arranging a service appointment. The digital service report keeps you up to date on performed service work at all times. The report is available to you online just one day after a service. In addition to the current service report, you can also view your vehicle's complete service history and service intervals, and you can print this information out if you so wish.

Mercedes me finance offers you various routes to your vehicle of choice. The Mercedes-Benz Bank/Mercedes-Benz Financial Services finds the ideal leasing, financing and insurance solution together with you – tailored to your needs. Our leasing products enable you to drive the latest models at all times while enjoying maximum flexibility, as you pay not for acquisition of the vehicle, but only for its use. You also benefit from attractive monthly instalments. Our financing arrangements enable you to pay for your new Mercedes-Benz in a way that suits your personal budget. You can tailor your monthly instalments to your needs by deciding on an appropriate down-payment and term for your contract. Our individual insurance solutions offer reliable protection for your budget and your vehicle on attractive terms. Once a contract is in place, you can conveniently manage your finance applications online.[1]

[1] Depending on market availability.

Mercedes-Benz
Service

Our service: the perfect fit for your Mercedes.

Beyond the car itself, you also acquire something priceless – an exclusive partnership with Mercedes-Benz. For you, this means safety, independence and motoring free of any worries. In other words: the reassuring feeling of driving a Mercedes.

The best for your Mercedes. No-one knows your Mercedes better than our experienced specialists at the Mercedes-Benz workshops. The comprehensive range of services and the high standard of quality ensure that your vehicle is in top condition. We use proven Mercedes-Benz GenuineParts and special tools to this end.

The best for you. Motoring free of any worries right from the word go: with the tailor-made Mercedes-Benz Service Contracts. These offer you the benefits of a reliable basis for long-term planning, permanent control over costs, fixed monthly rates and cost transparency. Plus ideal protection from additional workshop costs.

The best for your mobility. The Mercedes-Benz Mobilo[1] mobility solution provides for motoring free of any worries throughout Europe – covering breakdowns, accidents, minor mishaps and vandalism. The benefits offered by Mobilo include on-the-spot assistance, a replacement vehicle, towing and overnight hotel accommodation, for example. Mobilo comes free of charge for the first two years after initial registration and can subsequently be renewed each time the vehicle is serviced by an authorised service partner, for a period of up to 30 years in all. Whenever you need assistance, you can reach us free of charge throughout Europe on 00800 1 777 7777[2].

↘ **FIND OUT MORE**

For the full information on Mercedes-Benz Service Contracts, go to **www.mercedes-benz.com/servicecontracts** – or ask your authorised Mercedes-Benz dealer to draw up an individual offer for you.

[1] Our general terms and conditions apply. The period of validity is extended after each service carried out by an authorised Mercedes-Benz service partner until the due date for the next service – up to a maximum of 30 years after initial registration. [2] Roaming charges may apply when calling from abroad.

What would motorsport be without Mercedes-Benz?

The first vehicle ever to win an automobile race was powered by a Daimler engine. The first Mercedes was a racing car. The Silver Arrows – a true legend. Mercedes-Benz has a long tradition of involvement with the world of sport. Motorsport shapes the brand and every vehicle bearing the Mercedes star to this day. Discover the brand's unique history first-hand: at the Mercedes-Benz Museum in Stuttgart.

FIND OUT MORE

Discover just what has been moving the world for 130 years and take a journey through time as well as through the history of the automobile at the Mercedes-Benz Museum. More than 1500 exhibits await you on 16,500 m² of floorspace, including unique gems such as the oldest surviving Mercedes from 1902 or the legendary gull-wing models. Welcome to a place of innovation:

www.mercedes-benz.com/museum
www.facebook.com/mercedesbenzmuseum
www.instagram.com/mercedesbenzclassic
www.twitter.com/mb_museum
www.google.com/+mercedesbenzmuseum
www.youtube.com/mercedesbenzmuseum

What would Mercedes-Benz be without motorsport?

3 June 1934 marked the beginning of the Silver Arrows legend in the International Eifel Race at the Nürburgring. Today this legend is more alive than ever: in 2015 the Silver Arrows works team MERCEDES AMG PETRONAS won the Formula 1 constructors' and drivers' titles for the second year in a row. The value of these successes extends way beyond the race track: every mile raced advances the development of lightweight materials and hybrid technology, for example, for application in series production.

↘ **FIND OUT MORE**

Fascinating Formula 1 goes multimedia:
www.facebook.com/MercedesAMGF1
www.twitter.com/MercedesAMGF1
www.youtube.com/MercedesAMGF1
www.google.com/+MercedesAMGF1
www.instagram.com/MercedesAMGF1
www.MercedesAMGF1.com
www.mercedes-benz.com/motorsport

Mercedes-Benz F1 W07 hybrid, 2016 season.

1

2

3

0.25*. A small value that makes a big impact.

The B-Class sets new standards: the low wind resistance cuts driving noise and fuel consumption. Courtesy of a large roof spoiler, an aerodynamically efficient A-pillar design, aerodynamically optimised exterior mirrors and extensive panelling for the underbody. Further BlueEFFICIENCY equipment for cutting consumption and emissions includes the ECO start/stop function, tyres with optimised rolling resistance, the ECO display in the instrument cluster and the shift point indicator. The B 180 d BlueEFFICIENCY Edition is a benchmark in terms of efficiency. The adjustable radiator shutter and a lowered comfort suspension further optimise wind resistance, leading to even more exemplary emission values.

1 Adjustable radiator shutter (B 180 d BlueEFFICIENCY Edition)

2 ECO display in the instrument cluster

3 The refrigerant compressor is controlled to save energy and only active when required

4 Aerodynamic optimisation all-round for low fuel consumption and quiet running

5 Dual clutch transmission 7G-DCT

6 Tyres with reduced rolling resistance

* B 180 d BlueEFFICIENCY Edition with wheel R00.

4

5

6

NATURAL GAS DRIVE

The gas cylinders for the B 200 c are safely stowed away in the underbody. Two cylinders with a capacity of 19 l each, plus one under the rear bench seat holding 87 l. This configuration keeps the boot capacity at the same level as that of a B-Class with a conventional drive system.

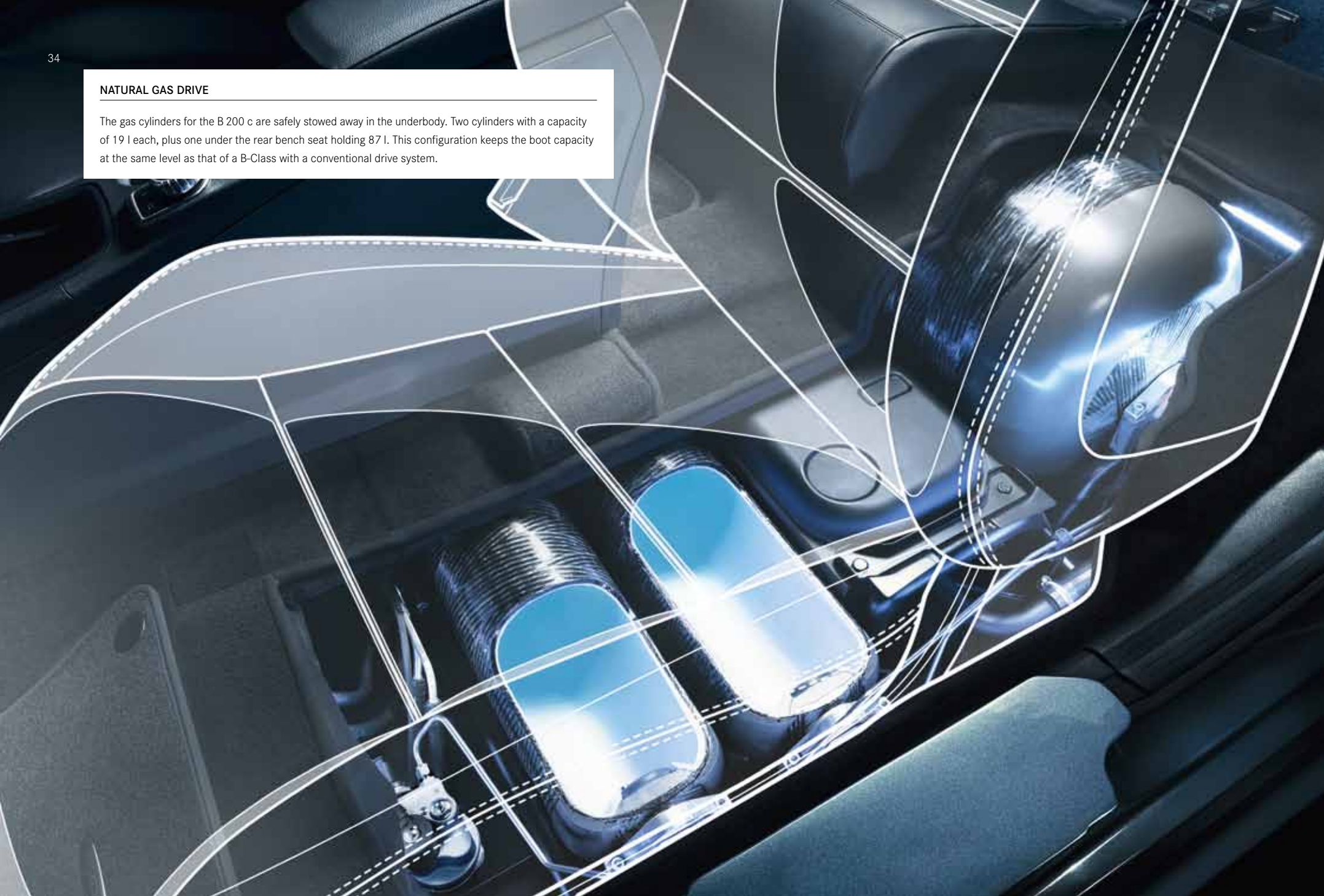

Natural Gas Drive.
The intelligent alternative.

The Monovalent Plus natural gas drive in the **B 200 c** boasts an astonishing combination of very low emissions and low fuel costs with dynamic performance. Powered by a smooth and efficient 4-cylinder petrol engine with direct injection and turbocharging. Monovalent Plus means that the engine normally runs on natural gas. Three natural gas tanks ensure a range of up to 500 km. A bonus where mobility is concerned is offered by the 12 l fuel tank for up to 200 km more. Should the supply of gas ever be exhausted, the vehicle automatically and indiscernibly switches over to petrol operation. The engine output is identical in each case. Once the natural gas tanks have been refilled, the journey is continued in natural gas mode.

Driving ambition.

Extremely efficient diesel and petrol engines are available for the B-Class in a total of nine output ratings. All engine variants are turbocharged and feature the ECO start/stop function as standard. There is also an alternative drive configuration for particularly environmentally friendly mobility in the form of the Monovalent Plus natural gas drive in the B 200 c (see the previous double page).

Depending on the engine variant, the power is transferred via a 6-speed manual transmission or the 7G-DCT automatic dual clutch transmission, which changes gear particularly smoothly and with hardly any interruption in tractive power.

↘ **FIND OUT MORE**

The full technical data for the B-Class can be found on page 58/59.

THE ENGINE RANGE

Diesel:
B 160 d with an output of 66 kW (90 hp) and 240 Nm of torque
B 180 d/B 180 d BlueEFFICIENCY Edition with an output of 80 kW (109 hp) and 260 Nm of torque
B 200 d/B 200 d 4MATIC with an output of 100 kW (136 hp) and 300 Nm of torque
B 220 d/B 220 d 4MATIC with an output of 130 kW (177 hp) and 350 Nm of torque
Petrol:
B 160 with an output of 75 kW (102 hp) and 180 Nm of torque
B 180/B 180 BlueEFFICIENCY Edition with an output of 90 kW (122 hp) and 200 Nm of torque
B 200 with an output of 115 kW (156 hp) and 250 Nm of torque
B 220 4MATIC with an output of 135 kW (184 hp) and 300 Nm of torque
B 250/B 250 4MATIC with an output of 155 kW (211 hp) and 350 Nm of torque

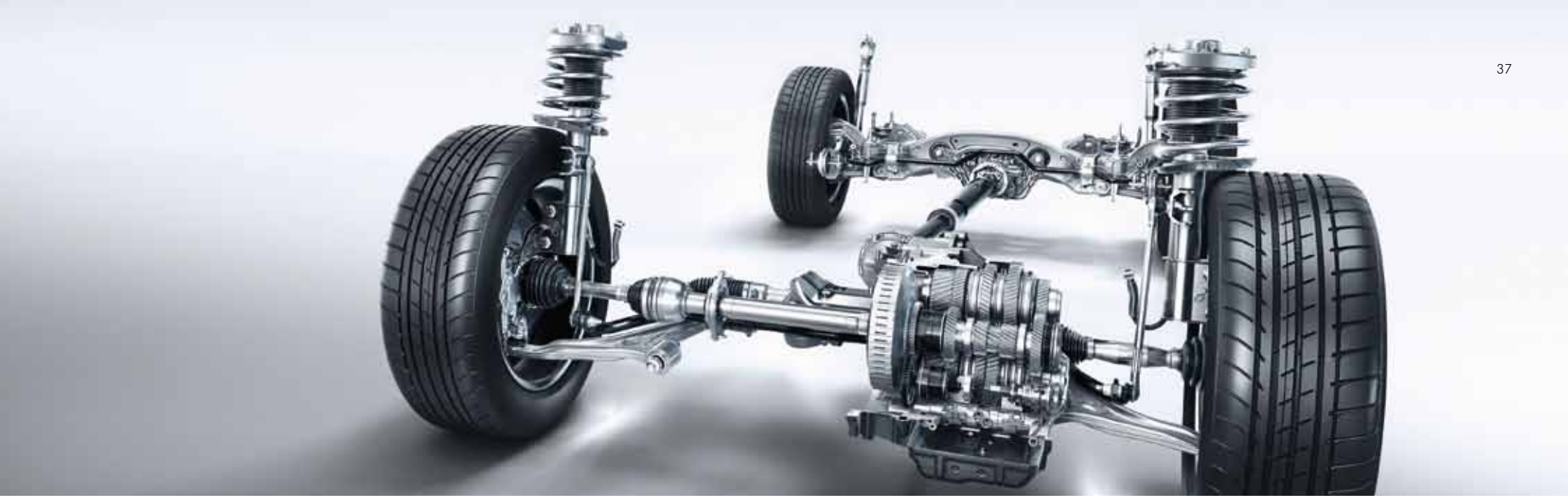

On the gripping subject of traction. 4MATIC all-wheel drive.

Specially developed for the B-Class platform. In normal conditions as efficient as front-wheel drive, but with tangibly more traction in the wet or snow: **4MATIC all-wheel drive** for the B-Class.

An electro-hydraulically controlled multiple-disc clutch integrated in the rear axle differential enables variable torque distribution. This ranges from particularly economical front-wheel drive only, e.g. for steady motorway driving, to a 50 : 50 split on snow or slippery road surfaces or in dynamic driving manoeuvres.

FASCINATING SUSPENSION AND STEERING TECHNOLOGY

A good balance between comfort and dynamism is offered by the **comfort suspension**. Low levels of rolling and pitching improve vehicle control and handling safety.

The **suspension with Adaptive Damping System** enables the driver to alter the vehicle's damping characteristics via the **DYNAMIC SELECT switch**. Switching from comfort to sport mode increases the lateral dynamics and provides for a particularly intensive driving experience.

The **lowered comfort suspension** combines ride comfort and agility. Lowering the body by 20 mm at the front and 15 mm at the rear improves aerodynamics.

Speed-sensitive steering provides variable power assistance according to the vehicle's speed. At high speeds the servo assistance is reduced; at lower speeds it is continually increased.

The **Sports Direct-Steer system** adds to the comfort of speed-sensitive power steering with a variable ratio dependent on the steering angle. On winding roads, for example, this produces a more agile handling response and improved straight-line stability.

Introducing your personal assistants.

The optional **Parking Pilot** makes locating a parking space, parking and manoeuvring out of a parking space easier. On request it pilots the car into parallel and perpendicular parking spaces.[1] The Parking Pilot is automatically switched on when driving forwards up to 35 km/h and flags up suitable parking spaces. If the driver engages reverse gear and confirms the parking selection shown, the Parking Pilot offers assistance up to a speed of 10 km/h and supports the driver with active steering intervention.

VERY ATTENTIVE: FURTHER OPTIONAL ASSISTANTS

The **reversing camera** is activated automatically when reverse gear is engaged and shows the driver the area behind the vehicle on the Media Display together with dynamic guide lines.

The optional **Traffic Sign Assist** system is able to recognise speed limits, no-entry and no-overtaking signs and the ends of such restrictions, and to display them to the driver.

[1] Applicable to automatic vehicles only.

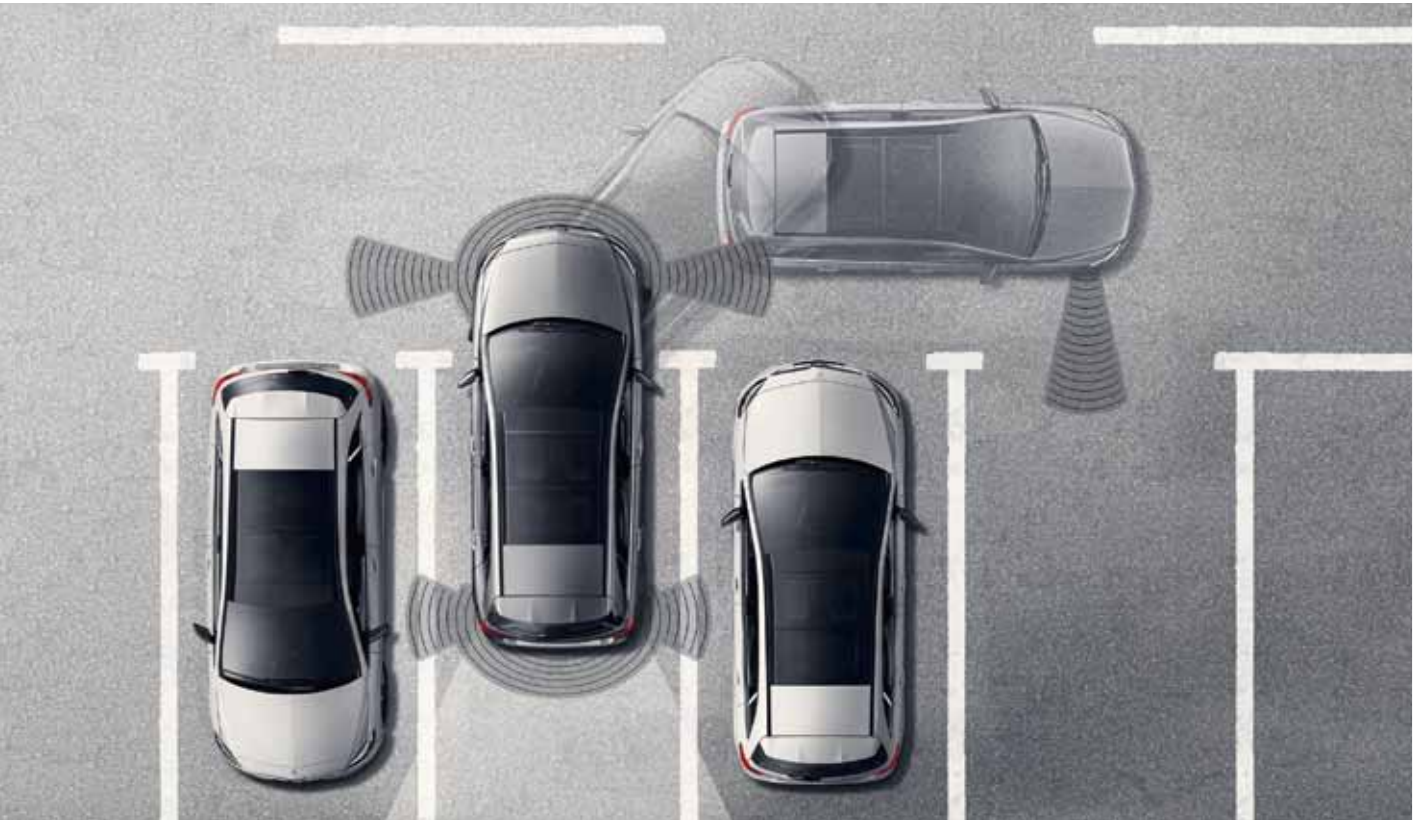

The reassuring feeling of driving a Mercedes-Benz.

We are the first automotive manufacturer worldwide to have developed an **integral safety concept**, aimed at avoiding accidents, ensuring ideal responses to dangers and lessening the consequences of accidents. For the occupants of a Mercedes and for all other road users, too.

SAFE DRIVING

The **drowsiness detection system ATTENTION ASSIST** serves to enhance driving safety. It can monitor the driver's steering behaviour to detect typical signs of drowsiness and severe loss of attention, and give a visual and audible warning of impending microsleep.

The **ADAPTIVE BRAKE control system** improves braking performance through intelligent intervention: in wet conditions, the brake discs are kept dry. The brake pads are applied automatically when the driver's foot is removed abruptly from the accelerator pedal. On uphill slopes the system prevents the vehicle from rolling backwards.

Optional **Distance Pilot DISTRONIC** helps to maintain a safe distance from the vehicle ahead. The system is able to brake the vehicle automatically and subsequently accelerate again as appropriate to the traffic situation.

IN THE EVENT OF DANGER

Active Brake Assist, fitted as standard, gives the driver a visible warning if another vehicle is too close plus an audible warning if there is a risk of a collision and offers braking assistance appropriate to the situation, which can boost the braking power if the driver does not apply the brakes hard enough. If the driver fails to react, it can initiate autonomous braking to prevent a collision or at least lessen its impact.

The optional **Blind Spot Assist** system employs radar sensors and can draw attention to one of the most serious sources of danger in road traffic. When a vehicle is detected in the blind spot, a red triangle lights up in the exterior mirror. An audible warning additionally sounds as necessary. The system is active at speeds between 30 and 250 km/h. The optional **Lane Keeping Assist** system is able to recognise when the vehicle is unintentionally drifting out of its lane at speeds between 60 and 200 km/h, duly warning the driver by means of pulsed vibrations on the steering wheel. Blind Spot Assist and Lane Keeping Assist also form part of the optional **Lane Tracking package**.

The optional **PRE-SAFE®** occupant protection system is able to identify critical driving situations in advance and to initiate precautionary measures to protect the vehicle's occupants if an accident appears imminent.

IN AN ACCIDENT

In an accident, the intelligently coordinated restraint systems and the structure of the vehicle's bodyshell make an effective contribution towards the best possible protection for the vehicle's occupants. These systems comprise the seat belts and the following airbags: front airbags for the driver and front passenger, each triggered in two stages depending on the registered severity of impact, sidebags for the driver and front passenger, windowbags between the A- and C-pillars, a kneebag for the driver plus optional sidebags in the rear.

AFTER AN ACCIDENT

Every Mercedes-Benz is fully trained in first aid. If the worst comes to the worst, the engine can be stopped automatically, the hazard warning lights and emergency interior lighting can be activated, and the central locking can be unlocked. Finally, the **Mercedes-Benz emergency call system** (country-specific) can transmit GPS position data and important vehicle information – though this will hopefully never be necessary.

Perfectly connected: with Apple CarPlay™.

Apple CarPlay™ for the iPhone® and **Android Auto** for Android devices allow optimum integration for a perfect car infotainment system. Including navigation option, telephony and messaging function by means of voice control plus access to the music player. Smartphone integration is part of COMAND Online and available as an option with Audio 20.

NAVIGATION AND INFOTAINMENT OPTIONS

Navigation, telephone, audio, video, internet – with the **COMAND Online** control and display system the driver is able to keep these and many other functions in view and under control. Everything is displayed in high resolution on the Media Display with a screen diagonal of 20.3 cm.

Live Traffic Information (part of the optional COMAND Online and Garmin® MAP PILOT) facilitates reception of the latest and precise traffic information for optimised dynamic route guidance and precisely calculated arrival times. Data transfer takes place with the aid of a communication module via a mobile internet connection.

User-friendly navigation, precise map data and excellent route guidance – the **Garmin® MAP PILOT** brings all the familiar benefits of a Garmin® navigation system to the Audio 20 CD – including Live Traffic Information. It is all done by simply inserting an SD card with navigation software and map data sets.

The **Audio 20 CD** multimedia system combines entertainment with information and communication. The Audio 20 CD with internet capability, radio with twin tuner and CD player also allows mobile devices to be networked via Bluetooth®, optionally also on the 20.3 cm Media Display.

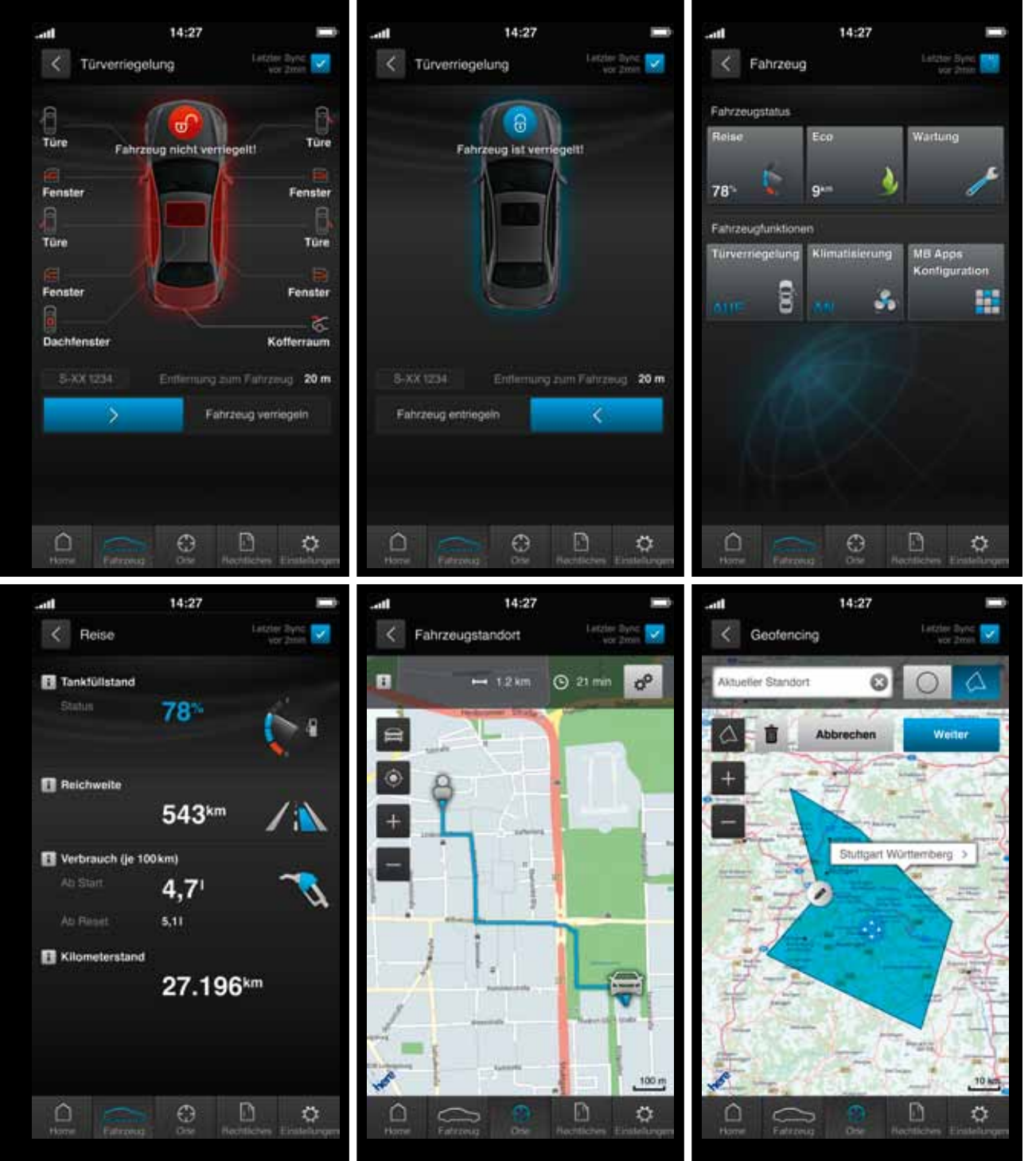

All linked up.
With Mercedes me connect.

Our innovative and individualised mobility, connectivity and service offerings go by the name of Mercedes me. As part of this fascinating Mercedes-Benz world of experience, **Mercedes me connect** fully integrates driver, vehicle and personal lifestyle. Mercedes me connect Standard Services such as the Mercedes-Benz emergency call system or Breakdown Management offer immediate assistance.

The **Remote Online** equipment prepares the vehicle for the use of further – separately available – Mercedes me connect services such as the Parked Vehicle Locator function (see image below) or Remote Retrieval of Vehicle Status (see image above). Remote Online is available as an option in conjunction with the Audio 20 multimedia system and also forms an integral part of the optional COMAND Online multimedia system, opening up to you the whole world of Mercedes me connect – including browser, navigation with Live Traffic Information (free use for three years when you register at the Mercedes me connect Store within the three-month registration phase) and numerous apps. The Mercedes me connect services are only enabled at your request, apart from the automatically activated Mercedes-Benz emergency call system and Live Traffic Information.

↘ **LEARN MORE**

The full details are available at **www.mercedes.me/de**

The ambient lighting bids you a warm welcome.

Climb in and feel at home – with its pleasant, indirect light the **ambient lighting** available in combination with the optional Light and Sight Package creates a real sense of well-being throughout the entire interior. Especially at night, it accentuates the contouring and high quality of the interior design, imparts a feeling of security thanks to an impression of generous spaciousness and reduces dazzle from oncoming traffic. Twelve different colours and five dimming levels are available to create the desired lighting mood. The ambient lighting features full LED technology, and is conveniently controlled via the instrument cluster. It also switches on when the doors are opened, welcoming the passengers on board.

MORE LIGHT, PLEASE

The optional **Light and Sight Package** provides a higher quality feel for the interior and optimum visibility in the car. It comprises the single-tone ambient lighting, function illumination and a rain sensor for the windscreen wipers.

The optional brushed stainless-steel **door sill panels** add exclusive sporty highlights with their illuminated “Mercedes-Benz” lettering. They also protect the entrance area from damage.

The **ambient lighting** greets you with an uplifting play of colour as soon as you open the doors.

A dream of a load compartment.

The optional **EASY-VARIO-PLUS system** features 140 mm fore/aft adjustment for the rear seats, providing for added stowage capacity or more kneeroom. The system also includes the Load Compartment Package, with a load compartment floor that can be set to either of two heights. In the higher position, this creates a surface that is almost level with the load compartment sill. This can be extended still further by folding down the backrests of the rear seats. In the lower position, the luggage space is enlarged, making it possible to load particularly high items. The front passenger seat can be folded forward. This allows the backrest to be used as a table by the rear-seat passengers, or the extra space to be used to load particularly long items. The angle of the rear-seat backrests can be adjusted to a 90° cargo position. This extends the luggage space, while the rear seats can still be used for passengers. The folding armrest with two cup holders offers a practical through-loading feature.

FURTHER LOAD COMPARTMENT OPTIONS

For more order, safety and additional stowage areas in the load compartment there is the optional **Load Compartment Package** with a height-adjustable load compartment floor, a 12 V socket and a folding box beneath the load compartment floor.

Duly adapted protection for children aged from around three to twelve comes in the form of the optional **child seats** integrated in the outer rear seats. For children aged from around two to four, a side head restraint (already included) and a special padded play table are additionally required.

S BR246

S BR 246

The standard equipment.

You can customise your B-Class right down to the finest points of detail. Equally, you can simply marvel at the extensive standard equipment.

↘ **FIND OUT MORE**

As attractive as this overview for the B-Class may be, it only provides an initial impression. For the complete range of standard equipment please refer to the price list, which is also available for viewing online.

EXTERIOR HIGHLIGHTS

- Steel wheels with 10-hole wheel trims (R00), fitted with 195/65 R 15 tyres (certain models with steel wheels featuring 10-hole wheel trims [643] with 205/55 R 16 tyres or 10-spoke light-alloy wheels [R43] with 225/45 R 17 tyres)
- Reflection-type headlamps
- Window weatherstrip and waistline trim in matt black plastic
- Door handles and bumpers painted in vehicle colour
- Comfort suspension

INTERIOR HIGHLIGHTS

- Seats with Venlo fabric upholstery (Vianen fabric for B 200 c)
- Matrix-look trim
- 3-spoke multifunction steering wheel with twelve function buttons
- KEYLESS-GO starting function with convenience central locking system
- Cruise control with variable speed limiter
- Roof liner in crystal grey fabric

Reassuringly stylish: the Style line.

Whether you are cruising the boulevards or exploring the countryside, these perfectly matched, stylish design and comfort features exude self-assurance and individuality.

EXTERIOR HIGHLIGHTS

- 10-spoke light-alloy wheels with 205/55 R 16 (55R) tyres
- 7-twin-spoke light-alloy wheels with 205/55 R 16 tyres (R27, for B 200 c)
- Radiator trim with two louvres painted in iridium silver and chrome inserts
- Beltline trim strip in chrome
- Long chrome trim strip on the rear bumper

INTERIOR HIGHLIGHTS

- Seats with accentuated shoulder area and Vianen fabric upholstery
- Seat Comfort Package, including seat cushion length adjustment with a 60 mm wider surface for the thighs
- Line pattern trim
- 3-spoke multifunction steering wheel with twelve function buttons
- Shift lever with silver-chrome trim highlights
- Instrument cluster with 11.4 cm TFT colour multifunction display
- High-gloss black light switch with ring in silver chrome

S BR 2462

S BR 2462

S BR 2463

BR 2463

Inspiringly progressive: the Urban line.

Take in the sights in your urbane Mercedes. Exceptional design is everywhere you look, while the interior offers a highly individual style.

EXTERIOR HIGHLIGHTS

- 5-twin-spoke light-alloy wheels with 225/45 R 17 (R04) tyres
- Multi-spoke light alloy wheels with 225/55 R 17 tyres (08R, for B 200 c)
- Radiator trim with two louvres painted in iridium silver and chrome inserts
- Two-pipe exhaust system with tailpipes in chrome look (except for B 200 c)
- Beltline trim strip in chrome
- Short chrome trim strip on the rear bumper

INTERIOR HIGHLIGHTS

- Seats with accentuated shoulder area and upholstery in ARTICO man-made leather/Montfoort fabric with contrasting topstitching
- Seat Comfort Package, including seat cushion length adjustment with a 60 mm wider surface for the thighs
- 3-spoke multifunction steering wheel in leather, with perforated grip area and twelve control buttons plus topstitching and trim in silver chrome
- Shift lever in perforated leather with contrasting topstitching and silver-chrome highlights
- Instrument cluster with silver-coloured dials and red pointers plus 11.4 cm colour TFT multifunction display
- Roof liner in black fabric (optionally roof liner in crystal grey fabric)

AMG Line.

Take your B-Class to the sporting pinnacle in terms of looks, driving feel and exclusivity. The AMG Line design and equipment line comprises extensive AMG bodystyling and further measures for enhancing driving dynamics. In the interior, too, which presents itself in a decidedly sporty guise.

EXTERIOR HIGHLIGHTS

- AMG bodystyling with front and rear apron plus side sill panels
- AMG 5-twin-spoke light-alloy wheels, painted titanium grey with a high-sheen finish, with 225/40 R 18 tyres
- Radiator trim with two louvres painted in iridium silver with chrome inserts
- Twin-pipe exhaust system with chrome-look tailpipes
- Lowered comfort suspension and Sports Direct-Steer system
- Perforated front brake discs
- Brake callipers with “Mercedes-Benz” lettering at the front

INTERIOR HIGHLIGHTS

- Seats with accentuated shoulder area and upholstery in ARTICO man-made leather/black DINAMICA microfibre with contrasting red topstitching
- Seat Comfort Package, including seat cushion length adjustment with a 60 mm wider surface for the thighs
- Carbon-fibre-look trim
- 3-spoke multifunction sports steering wheel in leather, with flattened bottom section, perforated in the grip area and with contrasting red topstitching
- Shift lever in perforated leather with contrasting red topstitching and silver-chrome highlights
- Brushed stainless-steel sports pedals with rubber studs

S BR 2464

S BR 2464

Exclusive Package.

The stylishly coordinated combination of selected interior appointments meets very high expectations with regard to comfort, quality and design. The highlights include heated front seats with 4-way lumbar support, which are covered in fine leather to match the multifunction steering wheel and gearshift lever. The dashboard and the door centre panels are finished in matching ARTICO man-made leather. Design features in silver chrome and trim in open-pore eucalyptus wood or high-gloss black ash also contribute to the exclusive ambience.

AMG Exclusive Package.

Building on the AMG Line, this equipment package offers maximum exclusivity, individuality and sportiness. Highlights include the heated seats with 4-way lumbar support, which make a striking impression with their RED CUT black leather upholstery with contrasting red topstitching. To match these seats, the dashboard and the door centre panels are finished in ARTICO man-made leather, as are the armrests in the doors. The multifunction sports steering wheel in leather with flattened bottom section and perforated grip area, together with the shift lever in perforated leather, feature a look and feel that underscores the interior's sporty character. The contrasting red topstitching is to be found on all these features, revealing a loving attention to detail.

Night Package.

The Night Package offers striking exterior features to lend the vehicle an expressive sporty character. These include selected design features in black. The radiator trim boasts two louvres in high-gloss black and chrome inserts. Also in black are the high-sheen 45.7 cm (18-inch) 5-twin-spoke light-alloy wheels, the exterior mirror housings and the beltline trim strips. Dark-tinted heat-insulating glass from the B-pillar onwards shields the interior from prying eyes while underscoring the vehicle's sporty character.

Optional extras.

There are endless ways of putting your personal stamp on the B-Class. From small details that add special touches to comfort features which until recently were the reserve of the luxury segment. Take your time to browse around – in this catalogue, by reference to the price list or online. A convenient means of configuring your B-Class is available on the national website for your country, accessible via www.mercedes-benz.com

1 In addition to their distinctive look, the **LED High Performance headlamps**[1] boost night-time driving safety thanks to broad light distribution, a daylight-simulating colour temperature, and low energy consumption. The "Coming Home" function welcomes the driver with an exceptional light display from blue to white when they unlock the car. The tail lights feature LED technology and create a visual highlight while improving visibility.

2 **KEYLESS-GO:** the vehicle can be conveniently unlocked, started and locked with this access and drive authorisation system – simply by having the electronic key on your person.

3 When not in use, the **trailer coupling**[2] can be folded out of the way behind the rear bumper. The coupling hitch is simply folded out to attach a car trailer or mount a bicycle carrier. A control with LED in the luggage compartment serves to release the coupling.

4 With twelve loudspeakers, including a woofer, and a 9-channel DSP amplifier, the 450 W **Harman Kardon® Logic 7® surround sound system** serves up a superlative listening experience.

5 **Panoramic sliding sunroof:** with its large glazed areas, this roof system ensures a particularly bright and welcoming ambience in the interior. The rear part consists of a fixed panoramic glass sunroof while the front part is an electrically operated glass sliding sunroof.

[1] Optional LED High Performance headlamps not available for B 200 c.
[2] Also available in combination with AMG Line.

1

2

3

4

5

Genuine accessories.

The B-Class leaves very little to be desired. And for those extra-special requirements there are genuine accessories. These cover almost every conceivable need for more pleasant and individual motoring.

1 **Rear-mounted bicycle rack for trailer coupling, folding.** The lockable rear-mounted bicycle rack for the safe and secure transportation of up to three bicycles is very simple to fit on the trailer coupling. And fixing your bikes on the racks is equally simple. Maximum load of up to 30 kg per bicycle rail – making the rack suitable for most e-bikes. Thanks to an ingenious roller mechanism the boot can still be opened.

2 Let your **Mercedes star** shine brightly. The star centred in the radiator grille of your Mercedes will light up courtesy of fibre optics and LED technology when the vehicle is unlocked by remote control and when a door or the boot lid is opened. Only functions when engine is switched off, not available in conjunction with DISTRONIC.

3 **Boot tub, shallow.** Made of impact-resistant polypropylene with an anti-slip effect. Protects your boot floor from dirt and is designed to fit perfectly into your boot.

4 **Alustyle Quickfix basic carrier bars.** Precisely coordinated with the body of your Mercedes-Benz, the aluminium carriers form the base for attaching many Mercedes-Benz transportation solutions: combined ski and snowboard racks, bicycle racks or roof boxes. They can be installed quickly and easily without tools thanks to an innovative, new quick-grip mounting system. Aerodynamic Mercedes-Benz design with optimised noise level. Crash-tested. Lockable.

New Alustyle "Comfort" ski and snowboard rack. Fits the anchorage on your basic carrier. For up to six pairs of skis* or four snowboards, lockable.

↘ **DISCOVER THE ENTIRE RANGE**

Now online at **www.mercedes-benz-accessories.com**

* Depending on ski dimensions.

1

2

3

4

Wheels.

Wheels are indispensable on technical grounds, of course. But on an emotional level, too, perfect wheels are an absolutely crucial ingredient of many people's dream car. With this in mind, we have put together a particularly large and diverse selection for you.

STANDARD EQUIPMENT AND OPTIONAL EXTRAS

R00	Steel wheels with 10-hole wheel trim and 195/65 R 15 tyres
643	Steel wheels with 10-hole wheel trim and 205/55 R 16 tyres
55R	10-spoke light-alloy wheels with 205/55 R 16 tyres
R27	7-twin-spoke light-alloy wheels, painted vanadium silver, with 205/55 R 16 tyres
R78	5-twin-spoke light-alloy wheels, painted matt lack with a high-sheen finish, with 205/55 R 16 tyres
R43	10-spoke light-alloy wheels with 225/45 R 17 tyres
R04	5-twin-spoke light-alloy wheels, painted silver, with 225/45 R 17 tyres
08R	Multi-spoke light-alloy wheels with 225/45 R 17 tyres

R15

R69

678

791

25R

01R

612

646

R15	5-twin-spoke light-alloy wheels, painted himalayas grey, with 225/45 R 17 tyres
25R	10-spoke light-alloy wheels, painted vanadium silver, with 205/50 R 17 tyres
R69	5-spoke light-alloy wheels, painted black with a high-sheen finish, with 225/45 R 17 tyres
01R	5-twin-spoke light-alloy wheels, painted black with a high-sheen finish, with 225/40 R 18 tyres

AMG

678	AMG 5-twin-spoke light-alloy wheels, painted titanium grey with a high-sheen finish, with 225/40 R 18 tyres
612	AMG 5-twin-spoke light-alloy wheels, painted black with a high-sheen finish, with 225/40 R 18 tyres
791	AMG multi-spoke alloy wheels, painted titanium grey with high-sheen finish, with 225/40 R 18 tyres
646	AMG multi-spoke alloy wheels, painted black with high-sheen rim flange, with 225/40 R 18 tyres

↘ **FURTHER WHEELS**

can be found in our accessories range.

Information on the range of Mercedes-Benz Genuine Accessories is available at **www.mercedes-benz-accessories.com** or from your authorised Mercedes-Benz dealer.

Technical data.

Diesel engines

	B 160 d	B 180 d	B 180 d BE Edition	B 200 d	B 200 d 4MATIC	B 220 d	B 220 d 4MATIC
Number of cylinders/arrangement	4/in-line	4/in-line	4/in-line	4/in-line	4/in-line	4/in-line	4/in-line
Displacement (cc)	1461	1461	1461	2143	2143	2143	2143
Rated output[1] in kW (hp) at rpm	66 (90)/2750–4000	80 (109)/4000	80 (109)/4000	100 (136)/3200–4000	100 (136)/3400–4400	130 (177)/3600–3800	130 (177)/3600–3800
Rated torque[1] (Nm at rpm)	240/1700–2500	260/1750–2500	260/1750–2500	300/1400–3000	300/1400–3000	350/1400–3400	350/1400–3400
Transmission	6-speed, man. [7G-DCT]	6-speed, man. [7G-DCT]	6-speed, man. [–]	6-speed, man. [7G-DCT]	– [7G-DCT]	– [7G-DCT]	– [7G-DCT]
Acceleration 0–100 km/h (secs.)	14.0 [13.8]	11.6 [11.6]	11.6 [–]	9.4 [8.9]	– [8.9]	– [7.6]	– [7.6]
Top speed (km/h)	180 [180]	190 [190]	190 [–]	210 [210]	– [207]	– [224]	– [220]
Front tyres/wheels	195/65 R 15	195/65 R 15	195/65 R 15	205/55 R 16	225/45 R 17	205/55 R 16	225/45 R 17
Rear tyres/wheels	195/65 R 15	195/65 R 15	195/65 R 15	205/55 R 16	225/45 R 17	205/55 R 16	225/45 R 17
Fuel	Diesel	Diesel	Diesel	Diesel	Diesel	Diesel	Diesel
Fuel consumption[2] (l/100 km)							
Urban	4.9–4.6 [4.7–4.4]	4.9–4.6 [4.7–4.4]	4.1 [–]	5.5–5.3 [4.9–4.7]	– [5.9–5.8]	– [5.0–4.9]	– [5.9–5.8]
Extra-urban	4.0–3.6 [4.1–3.7]	4.0–3.6 [4.1–3.7]	3.3 [–]	3.9–3.5 [3.8–3.5]	– [4.5]	– [3.8–3.6]	– [4.5]
Combined	4.4–4.0 [4.3–4.0]	4.4–4.0 [4.3–4.0]	3.6 [–]	4.5–4.2 [4.2–4.0]	– [5.0]	– [4.3–4.1]	– [5.0]
CO_2 emissions[2] combined (g/km)	113–104 [113–104]	113–104 [113–104]	94 [–]	117–109 [111–104]	– [131–130]	– [111–107]	– [131–130]
Emission class[3]/efficiency class[4]	Euro 6/A [Euro 6/A+]	Euro 6/A [Euro 6/A+]	Euro 6/A+ [–]	Euro 6/A [Euro 6/A+]	– [Euro 6/B]	– [Euro 6/A+]	– [Euro 6/B]
Tank capacity/of which reserve, approx. in l	50/6	50/6	40/6	50/6	56/6	50/6	56/6
Luggage compartment capacity (l)	488–1547	488–1547	488–1547	488–1547	488–1547	488–1547	488–1547
Turning circle (m)	11.0	11.0	11.0	11.0	11.0	11.0	11.0
Kerb weight[5]/payload (kg)	1420/565 [1450/535]	1420/565 [1450/535]	1410/490 [–]	1485/540 [1505/520]	– [1575/520]	– [1505/520]	– [1575/520]
Permissible gross vehicle weight (kg)	1985 [1985]	1985 [1985]	1900 [–]	2025 [2025]	– [2095]	– [2025]	– [2095]

The best for the engine:
Mercedes-Benz genuine engine oils.

[1] Figures for rated output and rated torque in accordance with Regulation (EC) no. 595/2009 as amended. [2] The figures stated for fuel consumption and CO_2 emissions were determined in accordance with the specified measuring process (§ 2 nos. 5, 6, 6a of German energy labelling ordinance for cars (Pkw-EnVKV) as amended). The figures are not based on an individual model and do not constitute part of the product offer; they are provided solely for purposes of comparison between different vehicle models. [3] Data applicable within the European Union only. May vary from country to country. [4] Determined on the basis of the measured CO_2 emissions, taking into account the mass of the vehicle.

	Petrol engines							Natural Gas Drive
	B 160	**B 180**	**B 180 BE Edition**	**B 200**	**B 220 4MATIC**	**B 250**	**B 250 4MATIC**	**B 200 c**
Number of cylinders/arrangement	4/in-line	4/in-line	4/in-line	4/in-line	4/in-line	4/in-line	4/in-line	4/in-line
Displacement (cc)	1595	1595	1595	1595	1991	1991	1991	1991
Rated output[1] in kW (hp) at rpm	75 (102)/4500–6000	90 (122)/5000	90 (122)/5000	115 (156)/5300	135 (184)/5500	155 (211)/5500	155 (211)/5500	115 (156)/5000
Rated torque[1] (Nm at rpm)	180/1200–3500	200/1250–4000	200/1250–4000	250/1250–4000	300/1200–4000	350/1200–4000	350/1200–4000	270/1250–4000
Transmission	6-speed, man. [7G-DCT]	6-speed, man. [7G-DCT]	6-speed, man. [–]	6-speed, man. [7G-DCT]	– [7G-DCT]	6-speed, man. [7G-DCT]	– [7G-DCT]	6-speed, man. [7G-DCT]
Acceleration 0–100 km/h (secs.)	10.7 [10.6]	9.0 [8.7]	9.0 [–]	8.2 [7.9]	– [7.0]	6.6 [6.5]	– [6.5]	9.2 [9.1]
Top speed (km/h)	190 [190]	200 [200]	190 [–]	220 [220]	– [225]	240 [240]	– [235]	200 [200]
Front tyres/wheels	195/65 R 15	195/65 R 15	195/65 R 15	205/55 R 16	205/55 R 16	225/45 R 17	225/45 R 17	205/55 R 16
Rear tyres/wheels	195/65 R 15	195/65 R 15	195/65 R 15	205/55 R 16	205/55 R 16	225/45 R 17	225/45 R 17	205/55 R 16
Fuel	Premium petrol	Premium petrol	Premium petrol	Premium petrol	Premium petrol	Premium petrol	Premium petrol	Nat. gas H/prem. petrol
Fuel consumption[2] (l/100 km)								
Urban	7.2 [7.1–7.0]	7.6–7.4 [7.1–7.0]	7.0 [–]	7.6–7.4 [7.1–7.0]	– [8.5]	8.8–8.6 [8.7–8.6]	– [8.5]	6.0 [5.7–5.6][6]
Extra-urban	4.6–4.4 [4.9–4.6]	4.8–4.5 [4.9–4.6]	4.2 [–]	4.8–4.6 [4.9–4.6]	– [5.8–5.6]	5.5–5.3 [4.8–4.7]	– [5.8–5.6]	3.5–3.4 [3.5][6]
Combined	5.6–5.5 [5.7–5.5]	5.8–5.6 [5.7–5.5]	5.2 [–]	5.8–5.7 [5.7–5.5]	– [6.8–6.7]	6.8–6.6 [6.2]	– [6.8–6.7]	4.4 [4.3–4.2][6]
CO_2 emissions[2] combined (g/km)	130–126 [132–127]	135–129 [132–127]	122 [–]	135–130 [132–127]	– [158–156]	157–152 [145–143]	– [158–156]	119–117 [117–115]
Emission class[3]/efficiency class[4]	Euro 6/B [Euro 6/B]	Euro 6/B [Euro 6/B]	Euro 6/B [–]	Euro 6/B [Euro 6/B]	– [Euro 6/D]	Euro 6/D [Euro 6/C]	– [Euro 6/D]	Euro 6/A [Euro 6/A]
Tank capacity/of which reserve, approx. in l	50/6	50/6	50/6	50/6	56/6	50/6	56/6	20 kg/3 kg (natural gas) 12/5 (premium petrol)
Luggage compartment capacity (l)	488–1547	488–1547	488–1547	488–1547	488–1547	488–1547	488–1547	501–1456
Turning circle (m)	11.0	11.0	11.0	11.0	11.0	11.0	11.0	11.0
Kerb weight[5]/payload (kg)	1395/565 [1425/535]	1395/565 [1425/535]	1395/565 [–]	1395/565 [1425/535]	– [1505/525]	1440/550 [1465/525]	– [1505/525]	1505/515 [1535/515]
Permissible gross vehicle weight (kg)	1960 [1960]	1960 [1960]	1960 [–]	1960 [1960]	– [2030]	1990 [1990]	– [2030]	2020 [2050]

[5] Figures for kerb weight in accordance with Directive 92/21/EC as amended (mass in ready-to-drive condition, fuel tank 90 percent full, with driver, 68 kilograms, and luggage, 7 kilograms) for standard-specification vehicles. Optional extras and accessories will generally increase this figure and reduce the payload capacity accordingly. [6] Figures apply solely for natural gas operation in kilograms per 100 km. Figures in square brackets refer to vehicles with automatic transmission. Further technical data can be found at **www.mercedes-benz.com**

Dimensions.

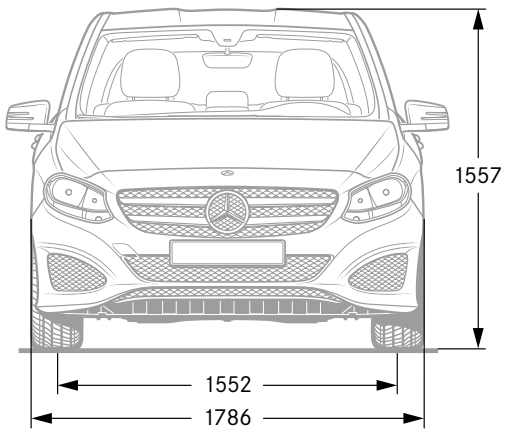

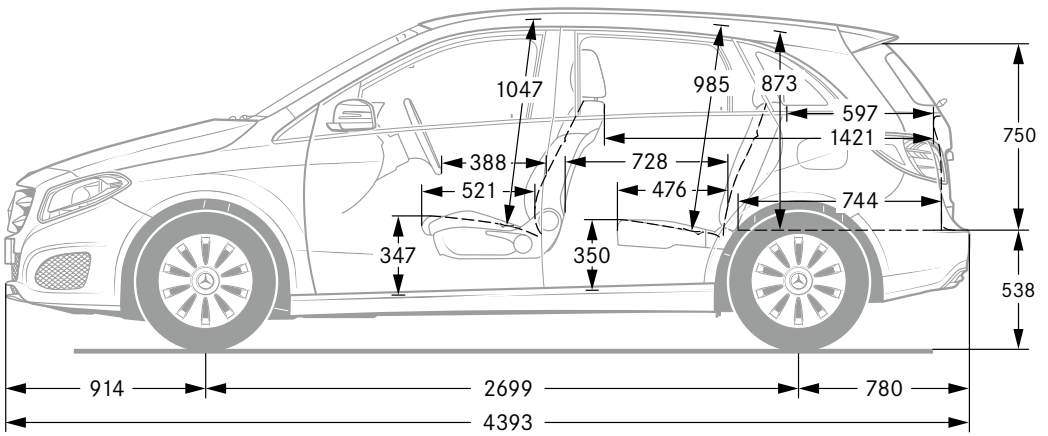

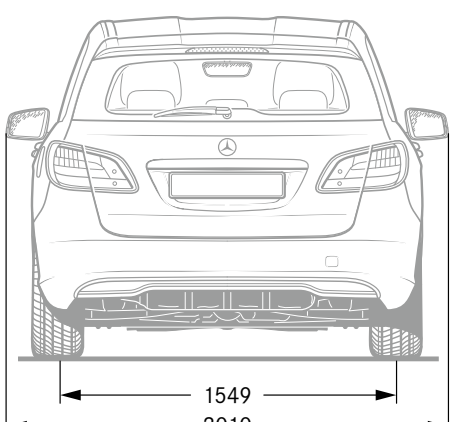

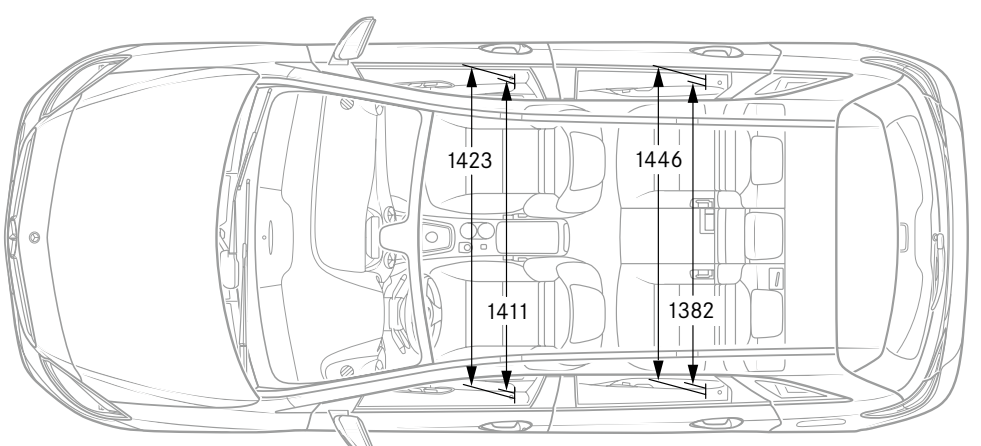

All dimensions in millimetres. The dimensions shown are mean values and apply to standard-specification, unladen vehicles. The dimensions shown correspond to vehicles with a diesel or petrol engine. Some figures may vary for the B 200 c.

Upholstery and trim.

Upholstery	
001	Venlo fabric in black
031	Vianen fabric in black[1]
038	Vianen fabric in crystal grey[1]
105	ARTICO man-made leather in sahara beige[2]
111	ARTICO man-made leather in black[2]
118	ARTICO man-made leather in crystal grey[2]
201	Leather in black
204	Leather in hazelnut brown
207	Leather in cranberry red
611	ARTICO man-made leather/Montfoort fabric in black
618	ARTICO man-made leather/Montfoort fabric in crystal grey
661	ARTICO man-made leather/DINAMICA microfibre in black
821	RED CUT leather in black

Trim	
H88	Matrix look
H53	Line pattern
H81	Sail pattern
H74	Carbon fibre look
734	Open-pore brown eucalyptus wood[2, 3]
736	High-gloss black ash wood[2, 4]

[1] Standard in conjunction with B 200 c. [2] Option. [3] Included in the Exclusive Package.
[4] Optionally available for the Exclusive Package at no extra charge.

Standard equipment

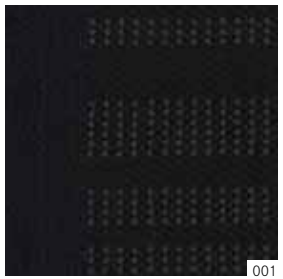
001

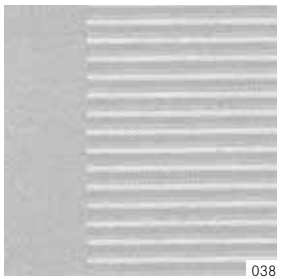
038

031

H88

Style[2]

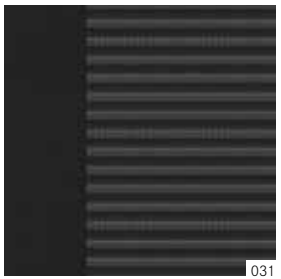
031

111

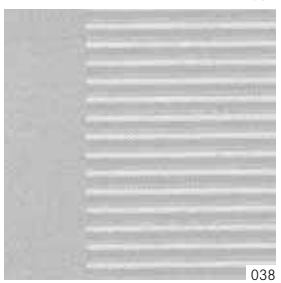
038

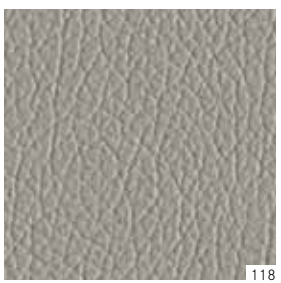
118

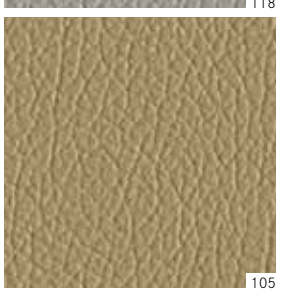
105

H53

734

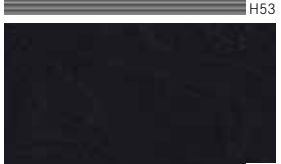
736

Urban[2]

611

111

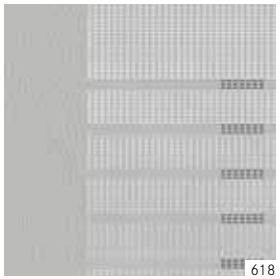
618

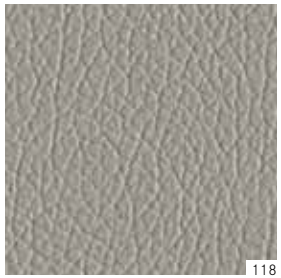
118

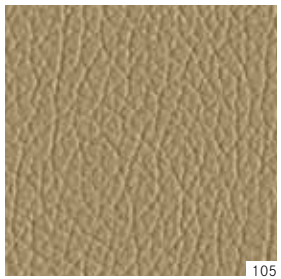
105

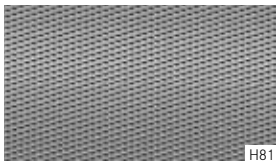
H81

734

736

AMG Line[2]

661

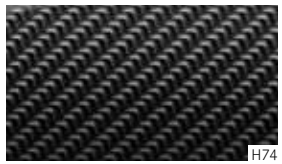
H74

736

Exclusive Package[2]

201

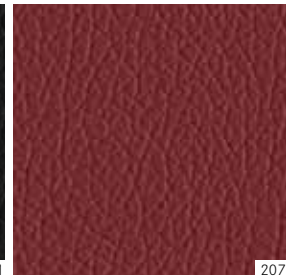
207

204

734

736

AMG Exclusive Package[2]

821

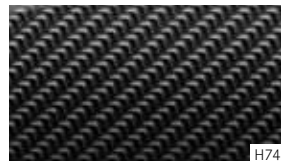
H74

736

Paint finishes.

Non-metallic paints

589

650

696

Metallic paints[1]

175

890

191

895

761

990

787

Non-metallic paints	
589	jupiter red
650	cirrus white
696	night black
Metallic paints[1]	
175	elbaite green
191	cosmos black
761	polar silver
787	mountain grey
890	cavansite blue
895	canyon beige[2]
990	orient brown

[1] Options. [2] Not available for B 200 c.

Mercedes-Benz is one of the founding partners of the "Laureus Sport for Good Foundation".
Since the foundation was established in 2000, Mercedes-Benz has been supporting and promoting the aims and values of this worldwide non-profit-making programme: to use social sports projects to improve the lives of children and young people who are disadvantaged or suffering from illness. Laureus has become a fundamental element of Mercedes-Benz's social responsibility. Every new Mercedes is an ambassador embodying these values. In buying a Mercedes you are supporting the "Laureus Sport for Good Foundation".

Please note: changes may have been made to the product since this brochure went to press (27.10.2016). The manufacturer reserves the right to make changes to the design, form, colour and specification during the delivery period, provided these changes, while taking into account the interests of the vendor, can be deemed reasonable with respect to the purchaser. Where the vendor or the manufacturer uses symbols or numbers to describe an order or the subject of an order, no rights may be derived solely from these. The illustrations may show accessories and items of optional equipment which are not part of standard specification. Colours may differ slightly from those shown in the brochure, owing to the limitations of the printing process. This brochure is distributed internationally. It provides a general indication of the range of models, features, optional extras and/or colours available in various countries. Some of the models, features, optional extras and/or colours shown may not be available in your country or may only be available in a different specification. Additionally some models, features, optional extras and/or colours may only be available in combination with others. For current and more specific information in relation to the range of models, features, optional extras and/or colours available in your country, and their pricing, you should contact your nearest authorised Mercedes-Benz Passenger Car Dealer.
www.mercedes-benz.com

Daimler AG, Mercedesstr. 137, 70327 Stuttgart MS/MAC 6701 · 1508 · **02**-03/0317

Take-back of end-of-life vehicles. At the end of its long life, you can return your B-Class to us for environment-friendly disposal in accordance with the European Union (EU) End-Of-Life Vehicle Directive. But that day lies a long way off.

A network of vehicle take-back depots and dismantling facilities has been established to make it as easy as possible for you to return your vehicle. You can leave it at any of these points free of charge. In so doing, you will be making a valuable contribution towards completing the recycling loop and preserving resources.

For more information about the recycling and disposal of end-of-life vehicles and take-back conditions, please visit your national Mercedes-Benz website.